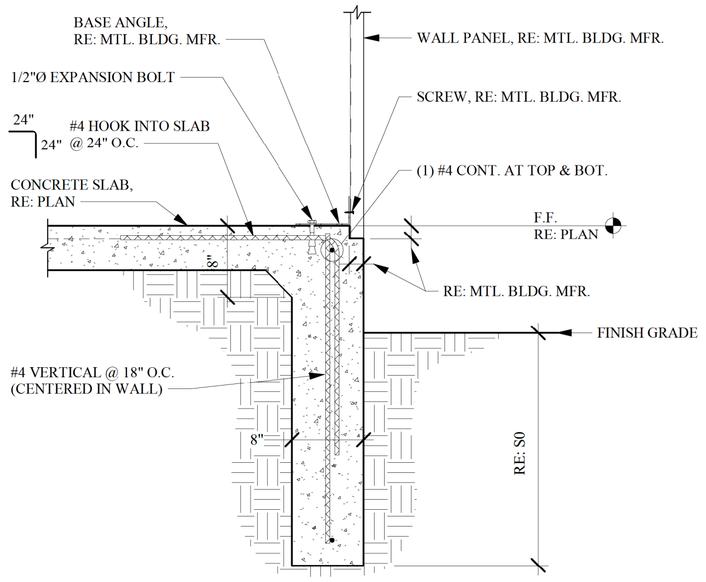

1 CONCRETE FOUNDATION WALL
1" = 1'-0"

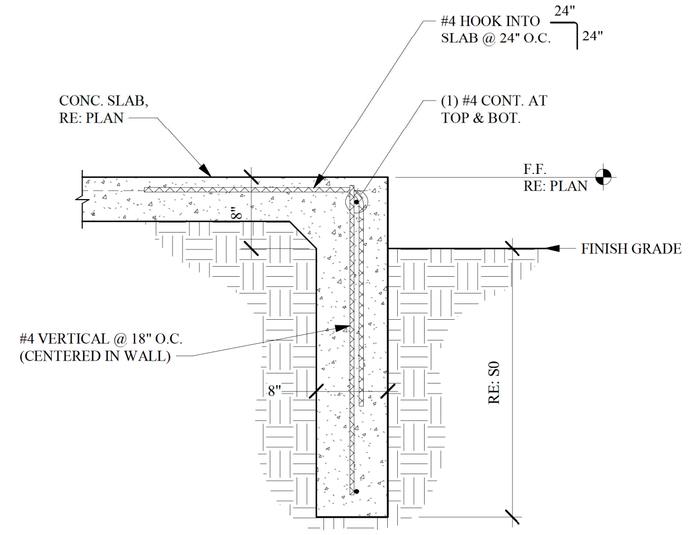

2 ENTRY FOOTING AT CONCRETE FOUNDATION WALL
1" = 1'-0"

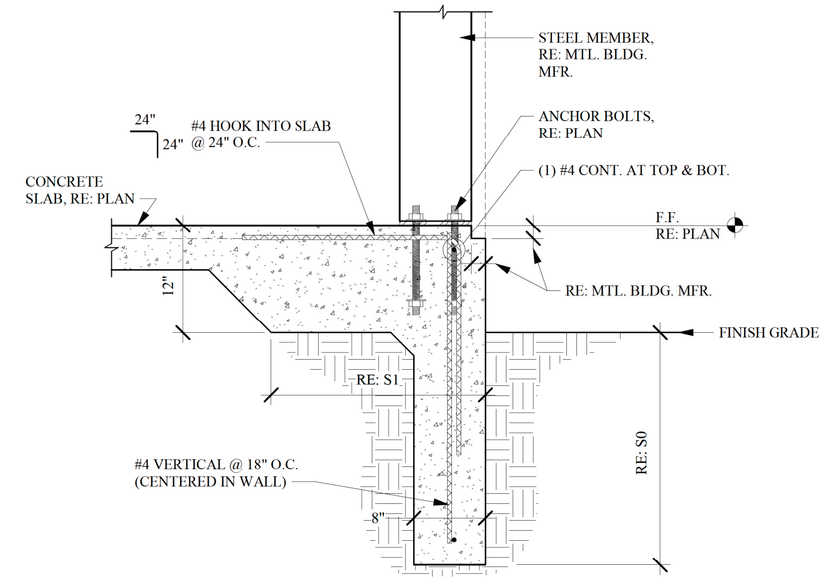

3 THICKENED SLAB COLUMN FOOTING
1" = 1'-0"

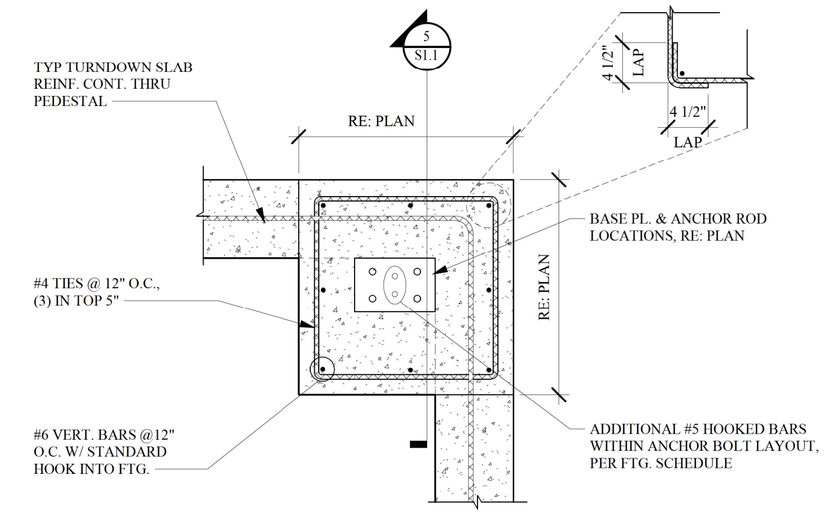

4 CORNER PEDESTAL
1" = 1'-0"

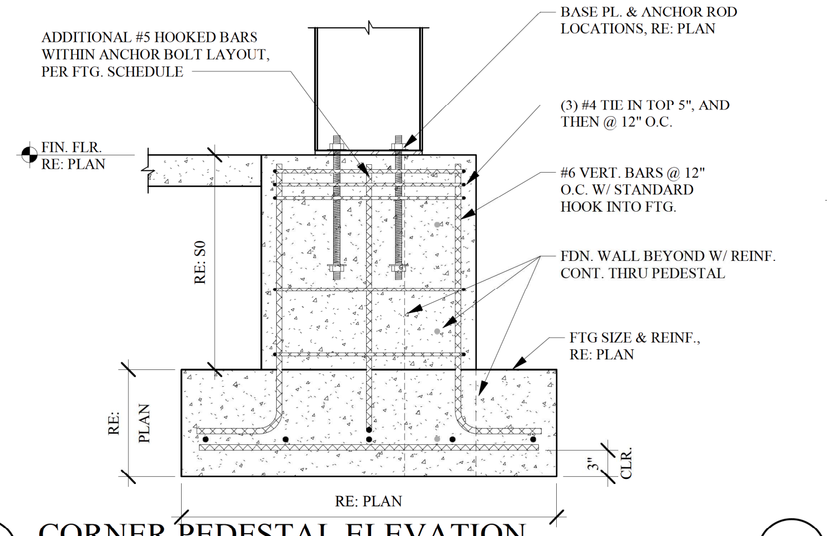

5 CORNER PEDESTAL ELEVATION
1" = 1'-0"

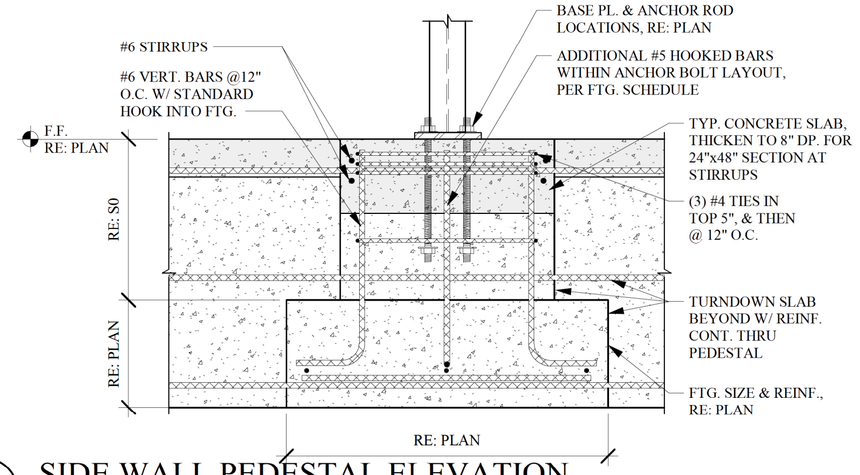

6 SIDE WALL PEDESTAL ELEVATION
1" = 1'-0"

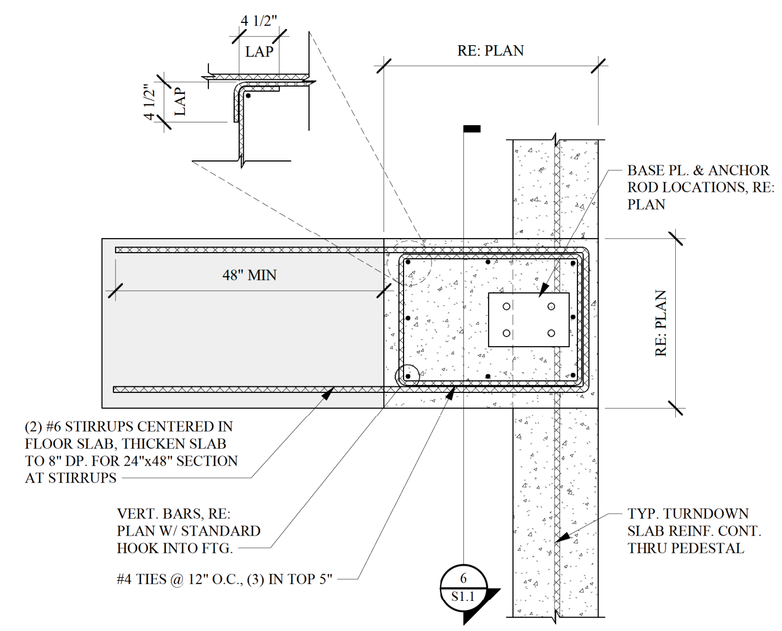

7 SIDE WALL PEDESTAL WITH STIRRUP INTO SLAB
1" = 1'-0"

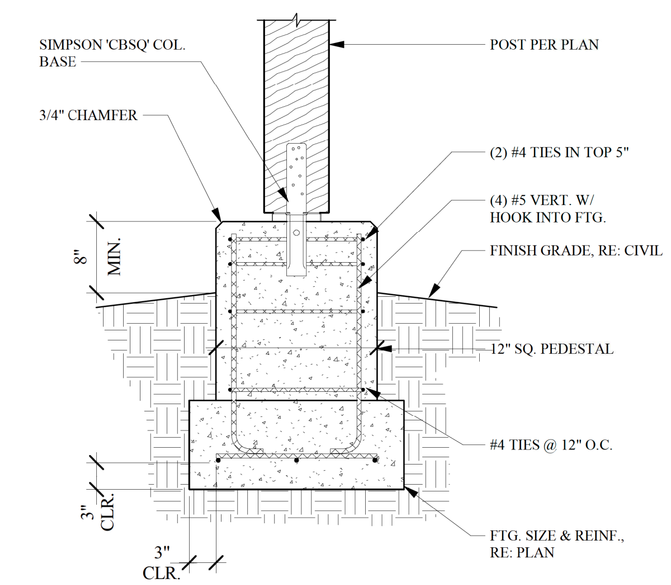

8 CONCRETE PEDESTAL
1" = 1'-0"

NOTE:
RE: S1 FOR LOCATION & ORIENTATION, VERIFY PLATE THICKNESS, LOCATION, & ORIENTATION W/ STEEL BLDG. DRAWINGS.

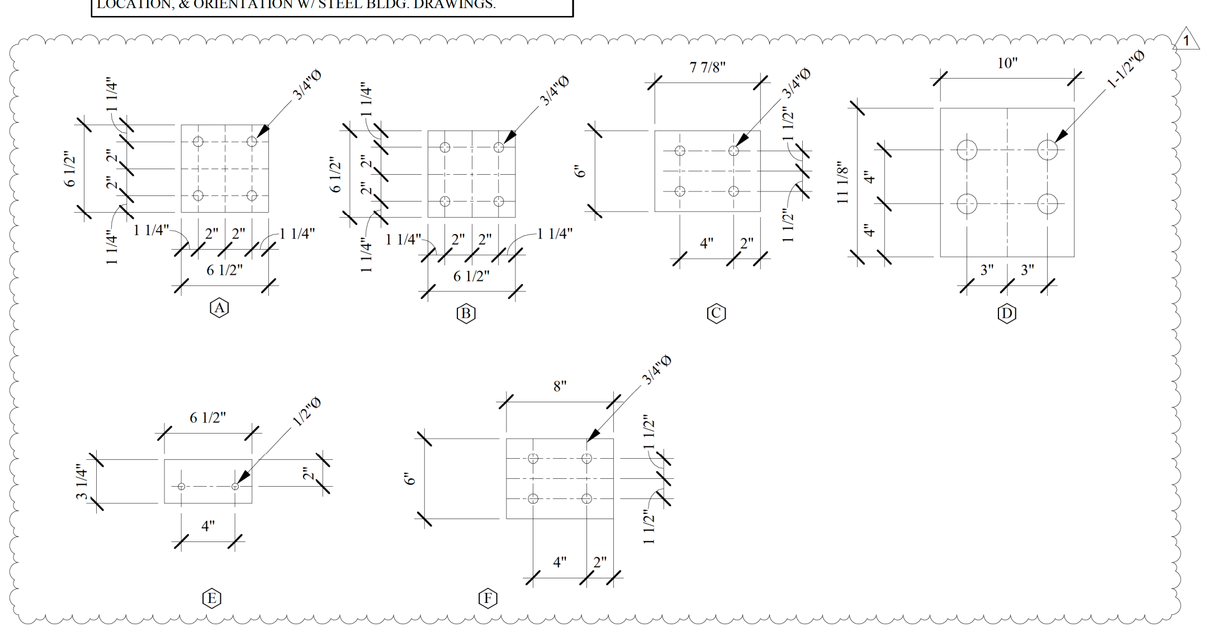

9 BASE PLATES
1 1/2" = 1'-0"

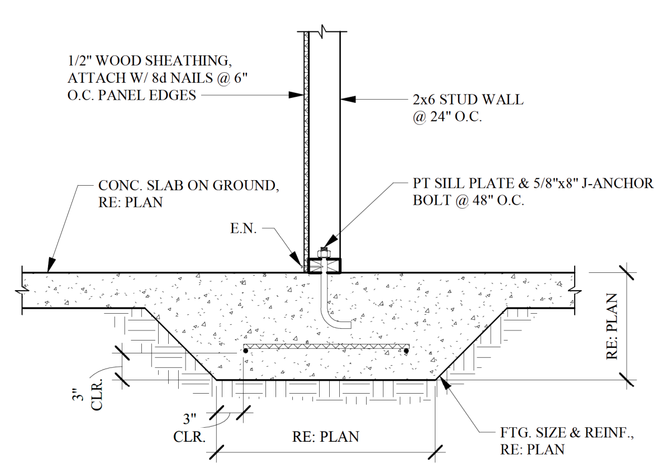

10 WALL AT THICKENED SLAB
1" = 1'-0"

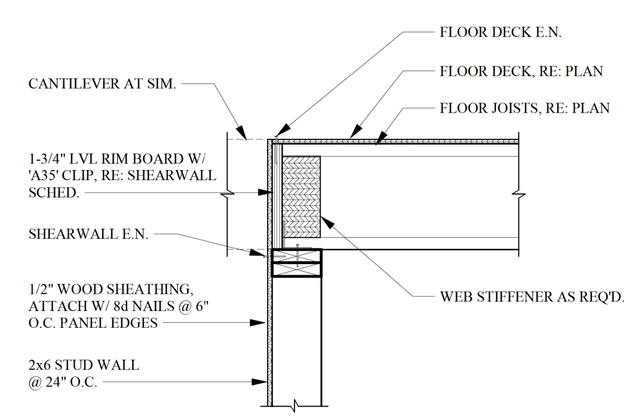

11 FLOOR JOIST TO WALL
1" = 1'-0"

TRW Architecture Planning Chtd.
515 EAST PARKWAY CT.
Boise, Idaho 83706
P: 208.371.9298
F: ***.***.****
trw@trwarchitecture.com www.trwarchitecture.com

PROFESSIONAL ENGINEER LICENSE 14438 STATE OF IDAHO DAVID NICHOLAS SANSOTTA
11/01/2018

structural
Jeremy Patrick P.E.
Email:jeremy@forcecrandledge.com
Phone:208-629-5124
Garden City, Idaho 83714

ADAMS COUNTY COMMUNITY CENTER

MICHIGAN STREET COUNCIL, IDAHO

SE18-195	
Date:	09/19/2018
Drawn By:	TJN
Checked By:	JMR/DNS
1 FOOTING REVISIONS	11/01/18

S1.1

FOUNDATION DETAILS

This set of documents, the ideas, designs, and drawings, are the exclusive property of TRW ARCHITECTURE CHTD. and they are not to be used, in whole, or in part, for any project without the written authorization of TRW ARCHITECTURE CHTD.