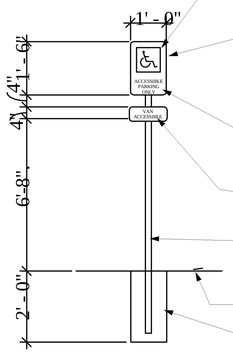

16 GA. GALV. STEEL SIGN PAINTED WITH BLUE REFECTORIES PAINT INCLUDING FASTENERS

INTERNATIONAL SYMBOL ACCESSIBILITY AND GRAPHICS PAINTED W/ WHITE REFLECTORIZED PAINT - GRAPHICS AS FOLLOWS

RESERVED FOR ACCESSBILE PARKING

VAN ACCESSIBLE

2" DIA. STD. WT. GALV. STEEL PIPE

LINE OF FINISHED

1'-0" DIA. CONC. FOOTING

2 A.D.A. PARKING SIGN
1/2" = 1'-0"

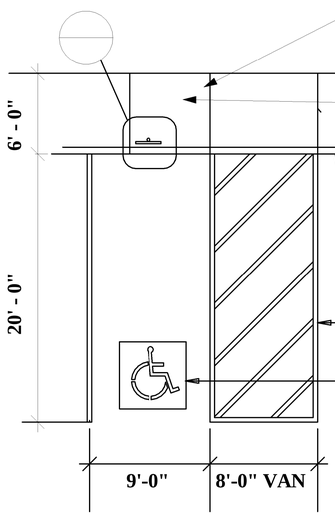

CURB RAMP RE: CIVIL DRAWINGS

TACTILE SURFACE

CURBING RE: CIVIL DRAWINGS

4" STRIPING

60" X 60" ACCESSIBLE SYMBOL

3 A.D.A. VAN PARKING
3/16" = 1'-0"

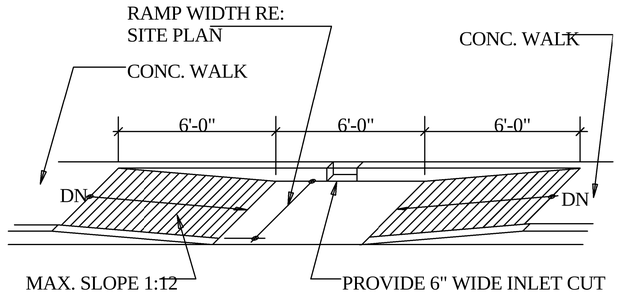

RAMP WIDTH RE: SITE PLAN

CONC. WALK

CONC. WALK

MAX. SLOPE 1:12

PROVIDE 6" WIDE INLET CUT IN CURB FOR LANDSCAPE DRAINAGE RE: CIVIL DRAWINGS

4 A.D.A. RAMP
3/8" = 1'-0"

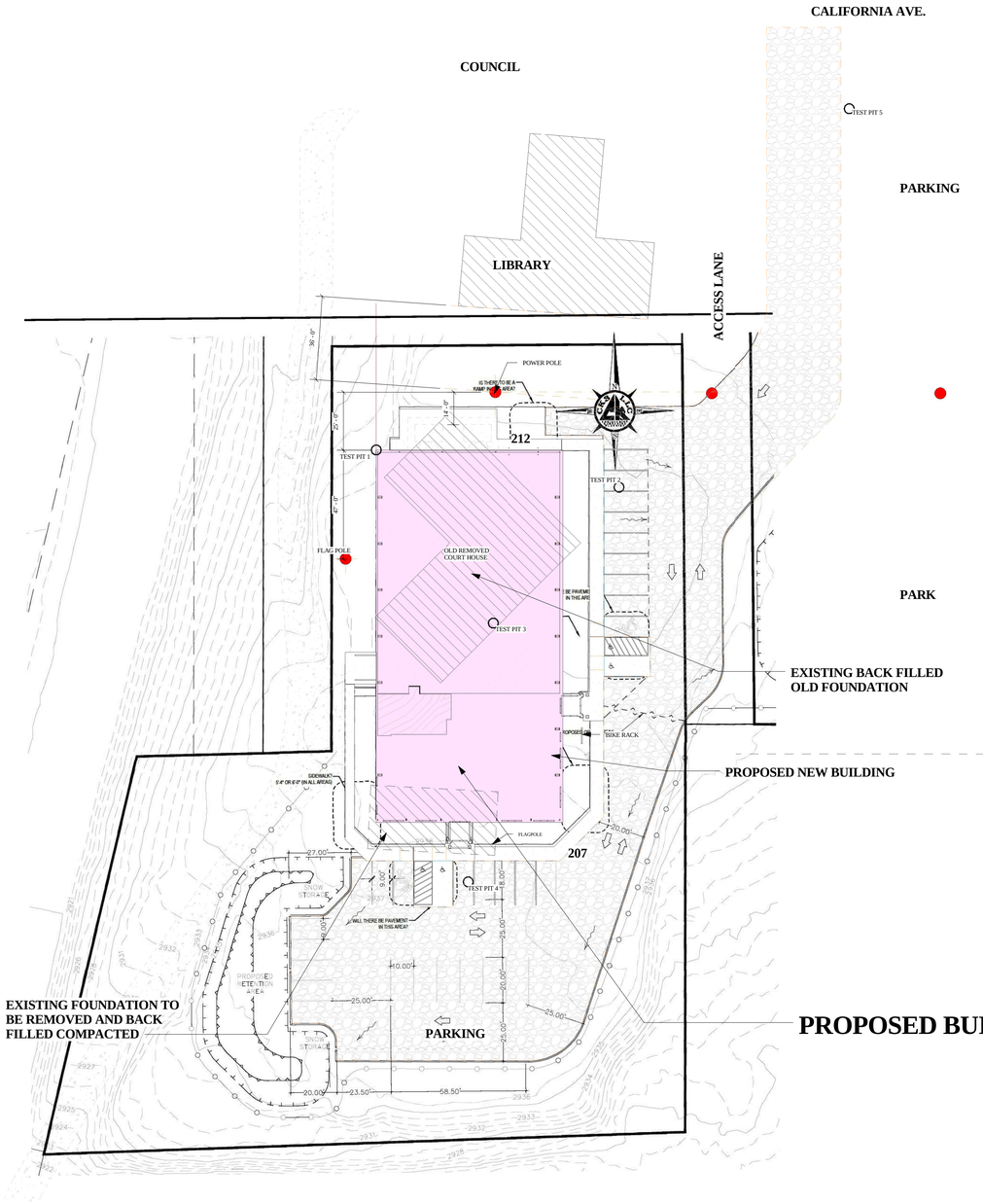

1 SITE
1" = 30'-0"

trw Architecture Planning Cntd.
515 EAST PARKWAY CT.
Boise, Idaho 83706
208.371.9298
trw@trwarchitecture.com
www.trwarchitecture.com

LICENSED ARCHITECT AR 1710
8-7-2018
THOMAS R. WILLIAMS
STATE OF IDAHO

ADAMS COUNTY COMMUNITY CENTER
107 MICHIGAN STREET
COUNCIL, IDAHO

Project Number	
Date: 10/24/2018 12:01:30 PM	
Drawn By:	Author
Checked By:	Checker
Revisions	

A1.0
SITE

This set of documents, the ideas, designs, and drawings, are the exclusive property of TRW ARCHITECTURE CHTD. and they are not to be used, in whole, or in part, for any project without the written authorization of TRW ARCHITECTURE CHTD.